14.5 Interface Modules

IM 315 Interface Module (6ES5 315-8MA11)

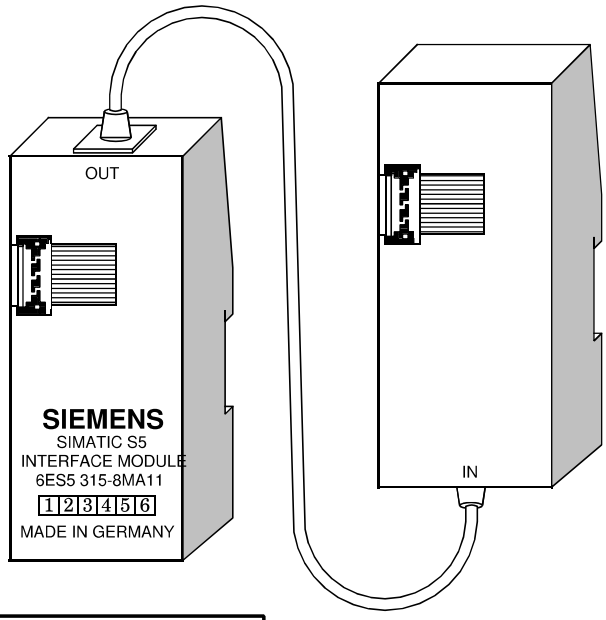

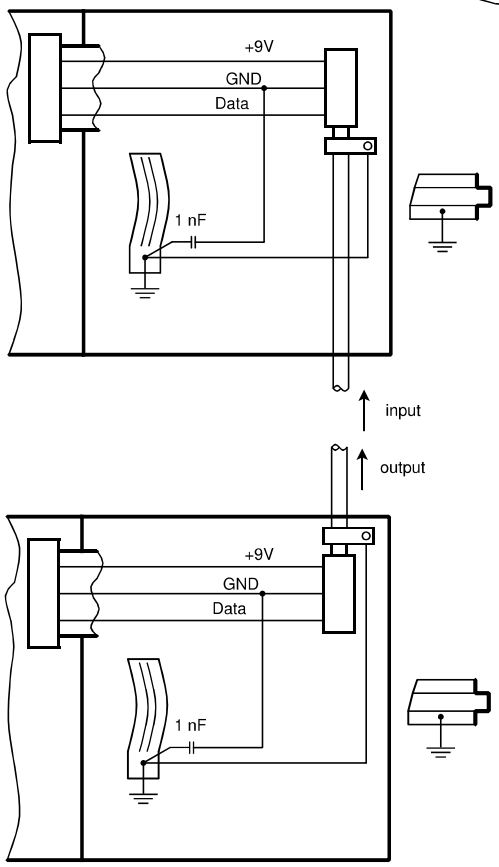

Technical specifications

Current supply to the expansion unit	max.	2.5 A
Number of interface modules per PLC	max.	1
Permissible potential difference between ⏚ (IM 315) and central ground point (CPU)		±1 V
Insulation rating		VDE 0160
Rated insulation voltage (+9 V to ⏚)		12 V AC
- insulation group		1×B
- tested with		500 V AC
Dimensions W×H×D in	mm	2×(45.4×135×39)
	in.	2×(1.8×5.3×1.5)
Current consumption - from +9 V (CPU)	typ.	1 mA
Weight	approx.	280 g (9.8 oz.)